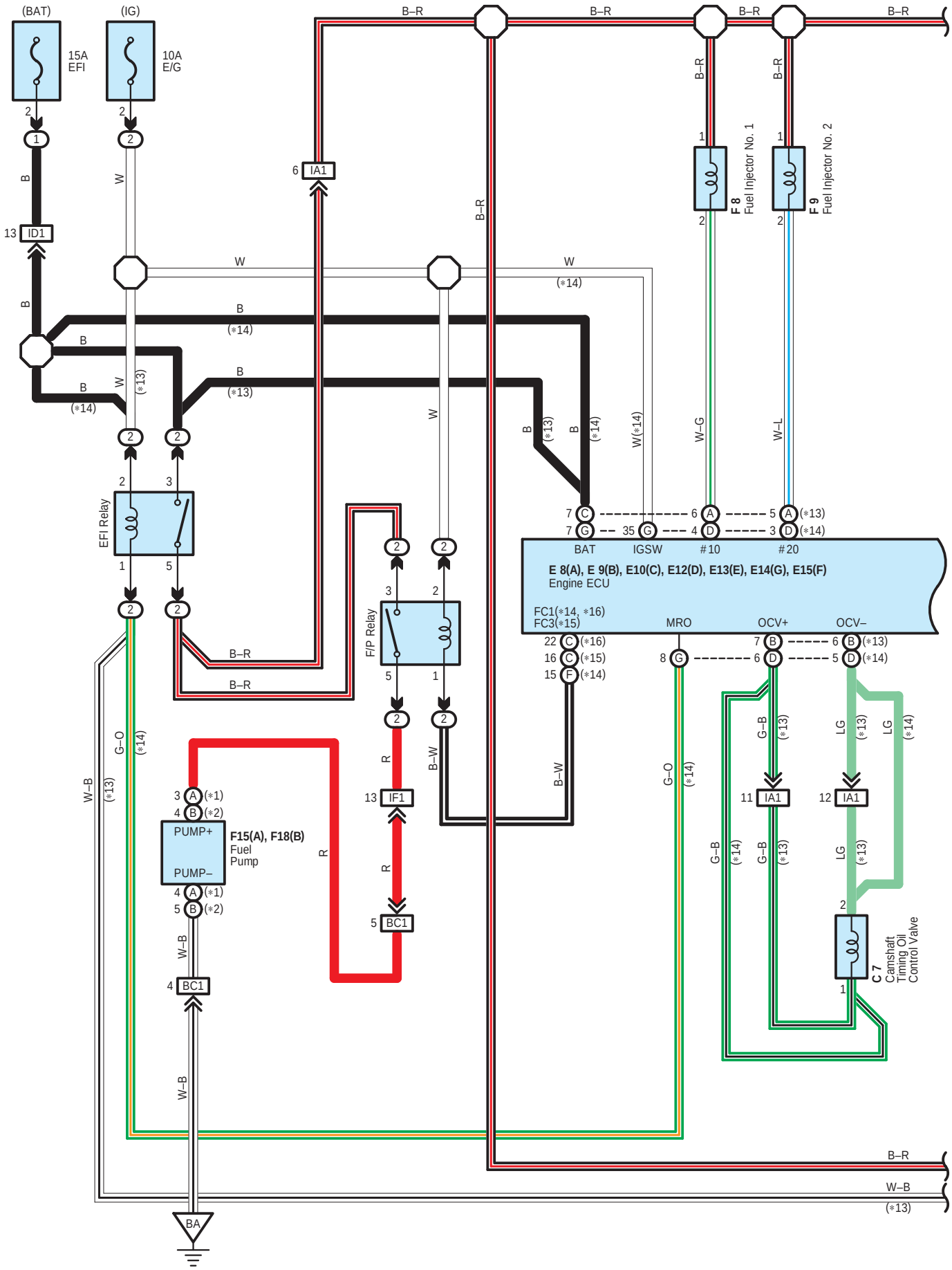
(BAT)
(IG)
15A
EFI
10A
E/G
ID1
IA1
EFI Relay
F/P Relay
IF1
BC1
F 8
Fuel Injector No. 1
F 9
Fuel Injector No. 2
E 8(A), E 9(B), E10(C), E12(D), E13(E), E14(G), E15(F)
Engine ECU
BAT
IGSW
#10
#20
FC1(*14, *16)
FC3(*15)
MRO
OCV+
OCV–
F15(A), F18(B)
Fuel
Pump
PUMP+
PUMP–
C 7
Camshaft
Timing Oil
Control Valve
BA

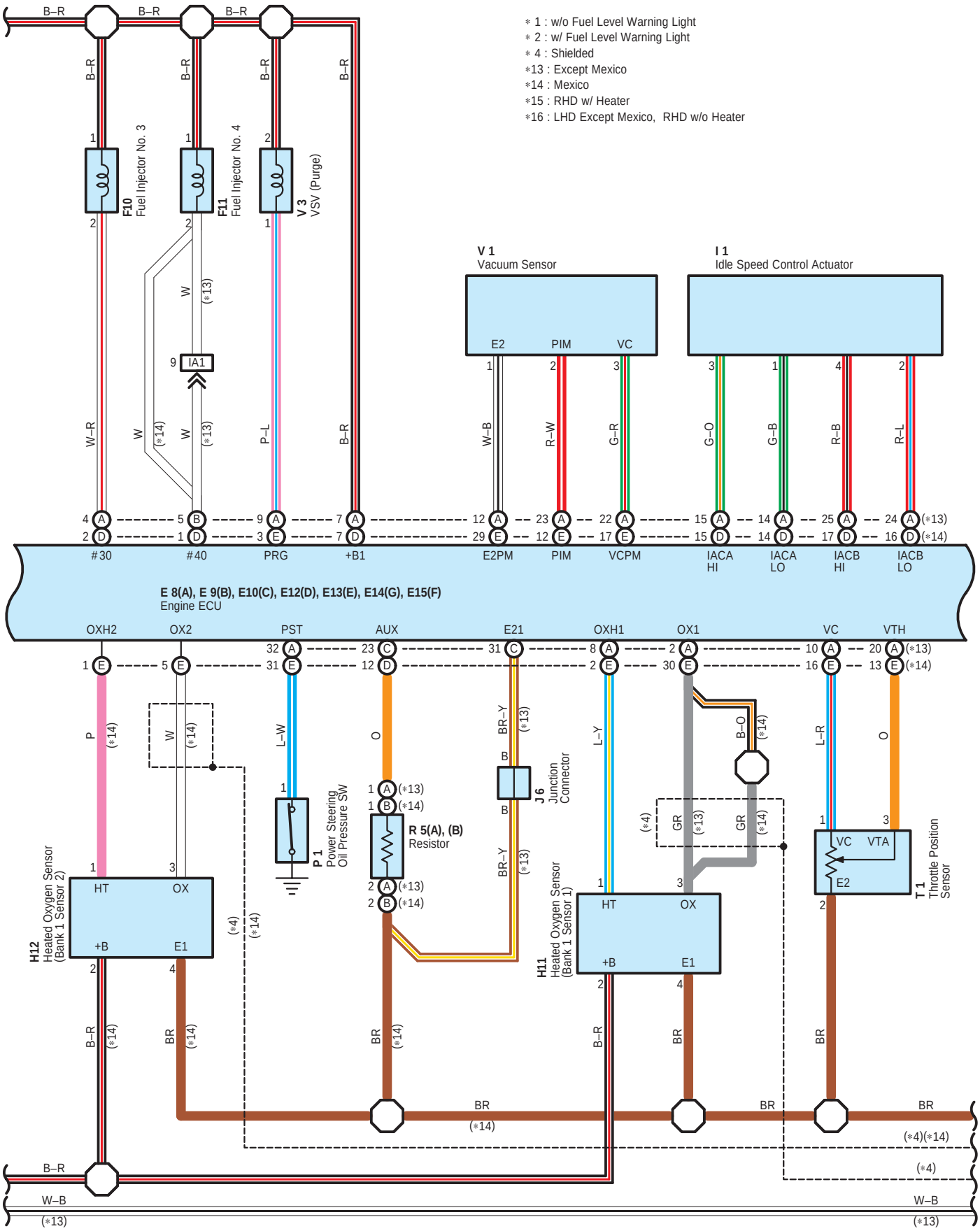
∗ 1 : w/o Fuel Level Warning Light
∗ 2 : w/ Fuel Level Warning Light
∗ 4 : Shielded
∗13 : Except Mexico
∗14 : Mexico
∗15 : RHD w/ Heater
∗16 : LHD Except Mexico, RHD w/o Heater
F10 Fuel Injector No. 3
F11 Fuel Injector No. 4
V 3 VSV (Purge)
IA1
V 1 Vacuum Sensor
I 1 Idle Speed Control Actuator
E2
PIM
VC
#30
#40
PRG
+B1
E2PM
VCPM
IACA HI
IACA LO
IACB HI
IACB LO
E 8(A), E 9(B), E10(C), E12(D), E13(E), E14(G), E15(F)
Engine ECU
OXH2
OX2
PST
AUX
E21
OXH1
OX1
VTH
P 1 Power Steering Oil Pressure SW
R 5(A), (B) Resistor
J 6 Junction Connector
H12 Heated Oxygen Sensor (Bank 1 Sensor 2)
H11 Heated Oxygen Sensor (Bank 1 Sensor 1)
T 1 Throttle Position Sensor
HT
OX
+B
E1
VTA

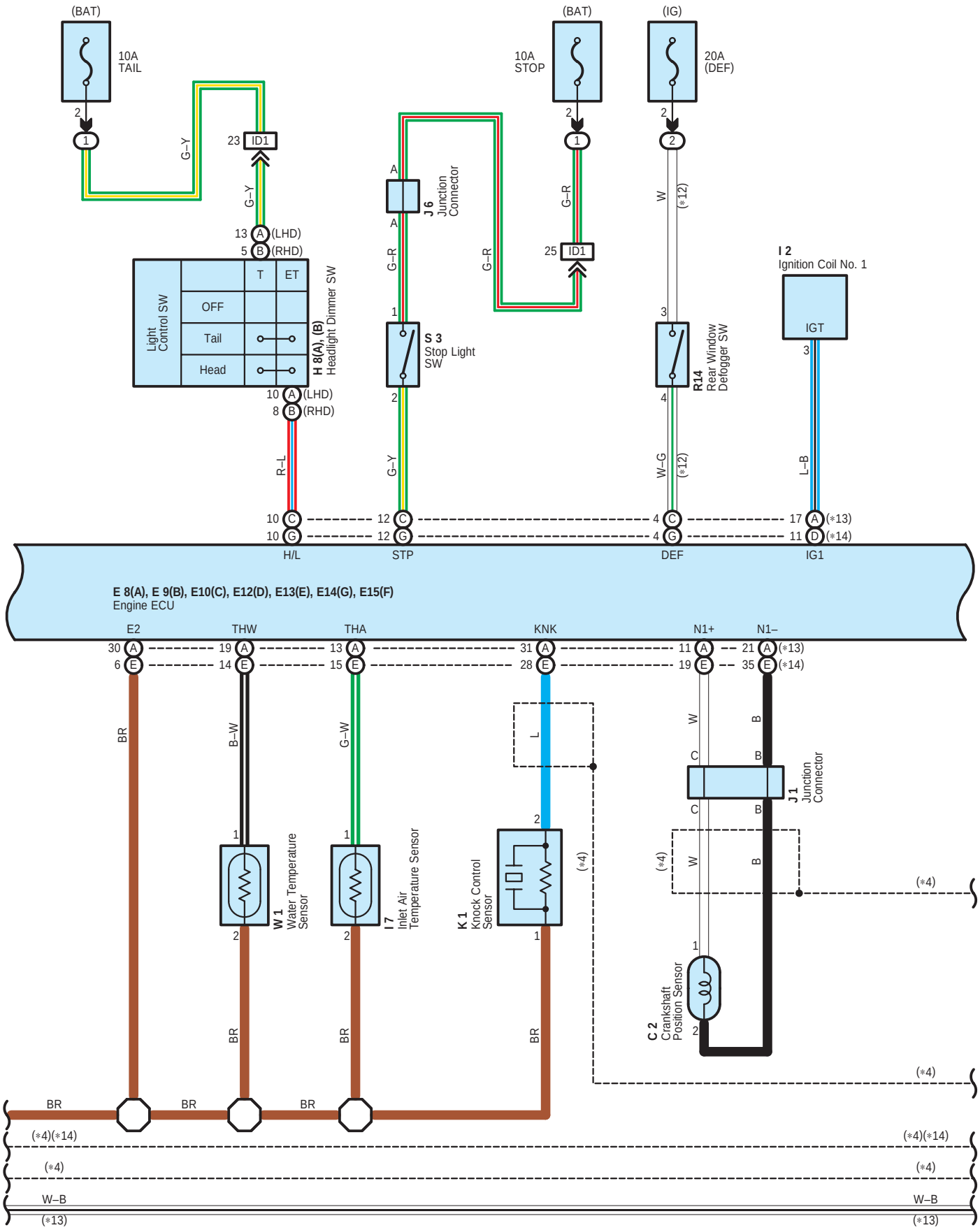
(BAT)
10A
TAIL
G–Y
23 ID1
13 A (LHD)
5 B (RHD)
Light Control SW
T
ET
OFF
Tail
Head
H 8(A), (B)
Headlight Dimmer SW
10 A (LHD)
8 B (RHD)
R–L
10 C
10 G
H/L
(BAT)
10A
STOP
G–R
25 ID1
J 6
Junction Connector
G–R
G–Y
S 3
Stop Light SW
12 C
12 G
STP
(IG)
20A
(DEF)
W
(*12)
3
R14
Rear Window Defogger SW
4
W–G
(*12)
4 C
4 G
DEF
I 2
Ignition Coil No. 1
IGT
L–B
17 A (*13)
11 D (*14)
IG1
E 8(A), E 9(B), E10(C), E12(D), E13(E), E14(G), E15(F)
Engine ECU
E2
THW
THA
KNK
N1+
N1–
30 A
6 E
19 A
14 E
13 A
15 E
31 A
28 E
11 A
19 E
21 A (*13)
35 E (*14)
BR
B–W
G–W
L
W
B
C
B
J 1
Junction Connector
W 1
Water Temperature Sensor
I 7
Inlet Air Temperature Sensor
K 1
Knock Control Sensor
(*4)
C 2
Crankshaft Position Sensor
BR
BR
BR
BR
(*4)(*14)
(*4)
W–B
(*13)

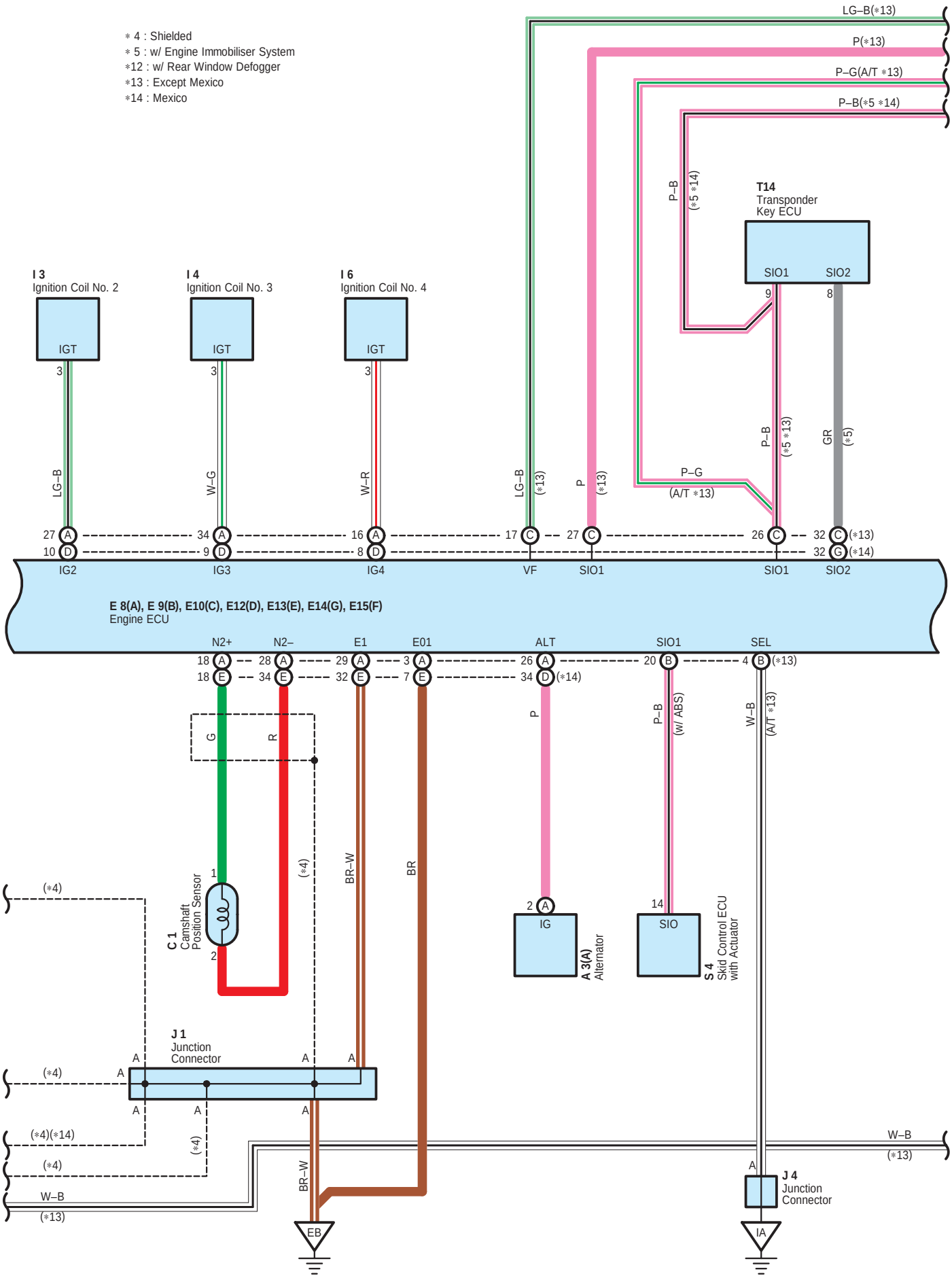
∗ 4 : Shielded
∗ 5 : w/ Engine Immobiliser System
∗12 : w/ Rear Window Defogger
∗13 : Except Mexico
∗14 : Mexico
LG–B(∗13)
P(∗13)
P–G(A/T ∗13)
P–B(∗5 ∗14)
T14
Transponder
Key ECU
SIO1
SIO2
I 3
Ignition Coil No. 2
I 4
Ignition Coil No. 3
I 6
Ignition Coil No. 4
IGT
LG–B
W–G
W–R
P–B
(∗5 ∗14)
P–B
(∗5 ∗13)
GR
(∗5)
P–G
(A/T ∗13)
(∗13)
IG2
IG3
IG4
VF
SIO1
SIO2
E 8(A), E 9(B), E10(C), E12(D), E13(E), E14(G), E15(F)
Engine ECU
N2+
N2–
E1
E01
ALT
SIO1
SEL
(∗14)
(w/ ABS)
(A/T ∗13)
G
R
(∗4)
BR–W
BR
C 1
Camshaft
Position Sensor
IG
A 3(A)
Alternator
SIO
S 4
Skid Control ECU
with Actuator
J 1
Junction
Connector
(∗4)(∗14)
W–B
(∗13)
J 4
Junction
Connector
EB
IA

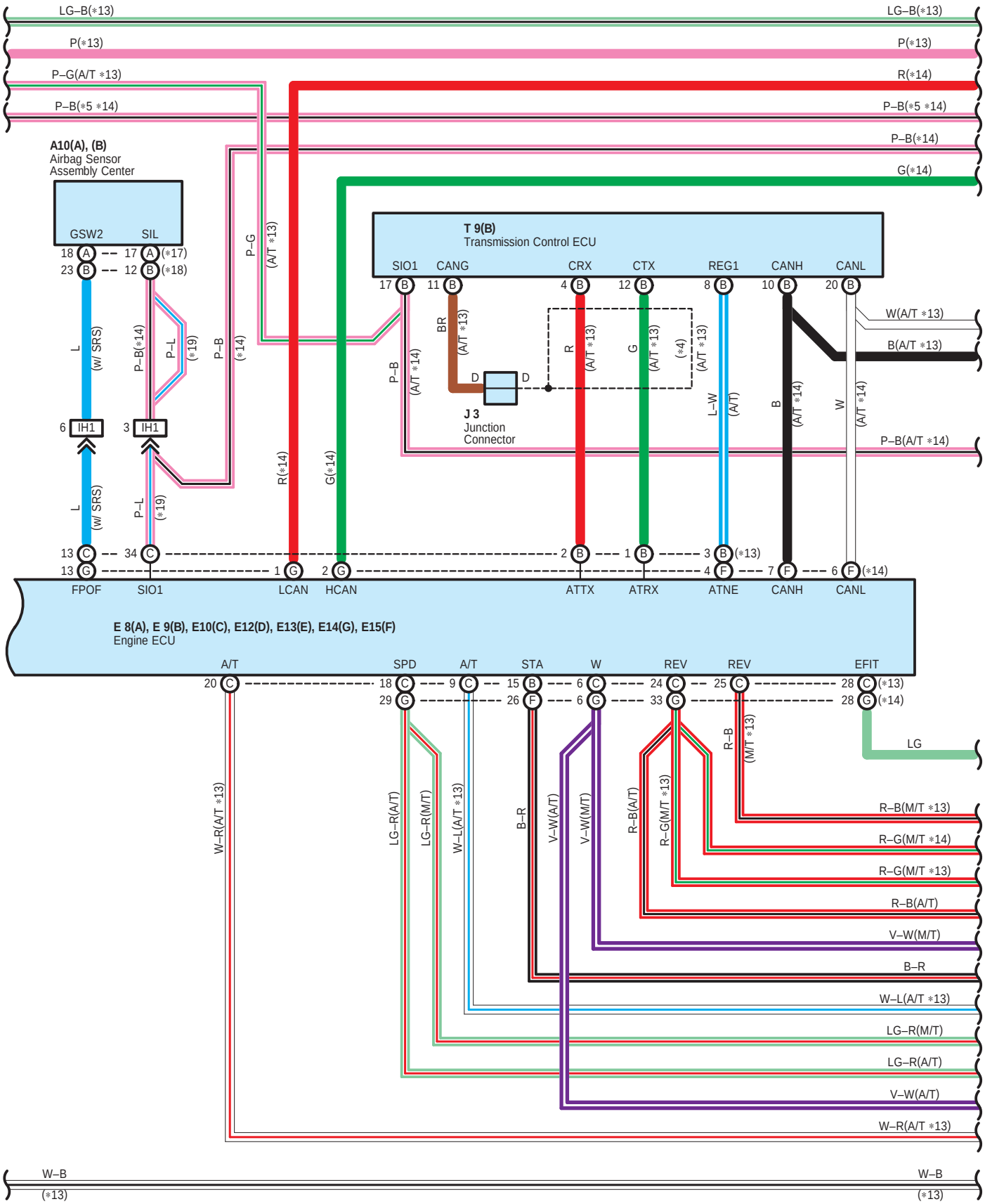
LG–B(∗13)
P(∗13)
P–G(A/T ∗13)
P–B(∗5 ∗14)
R(∗14)
P–B(∗14)
G(∗14)
A10(A), (B)
Airbag Sensor
Assembly Center
GSW2
SIL
T 9(B)
Transmission Control ECU
SIO1
CANG
CRX
CTX
REG1
CANH
CANL
W(A/T ∗13)
B(A/T ∗13)
P–B(A/T ∗14)
J 3
Junction
Connector
IH1
FPOF
SIO1
LCAN
HCAN
ATTX
ATRX
ATNE
CANH
CANL
E 8(A), E 9(B), E10(C), E12(D), E13(E), E14(G), E15(F)
Engine ECU
A/T
SPD
A/T
STA
W
REV
REV
EFIT
LG
R–B(M/T ∗13)
R–G(M/T ∗14)
R–G(M/T ∗13)
R–B(A/T)
V–W(M/T)
B–R
W–L(A/T ∗13)
LG–R(M/T)
LG–R(A/T)
V–W(A/T)
W–R(A/T ∗13)
W–B
(∗13)

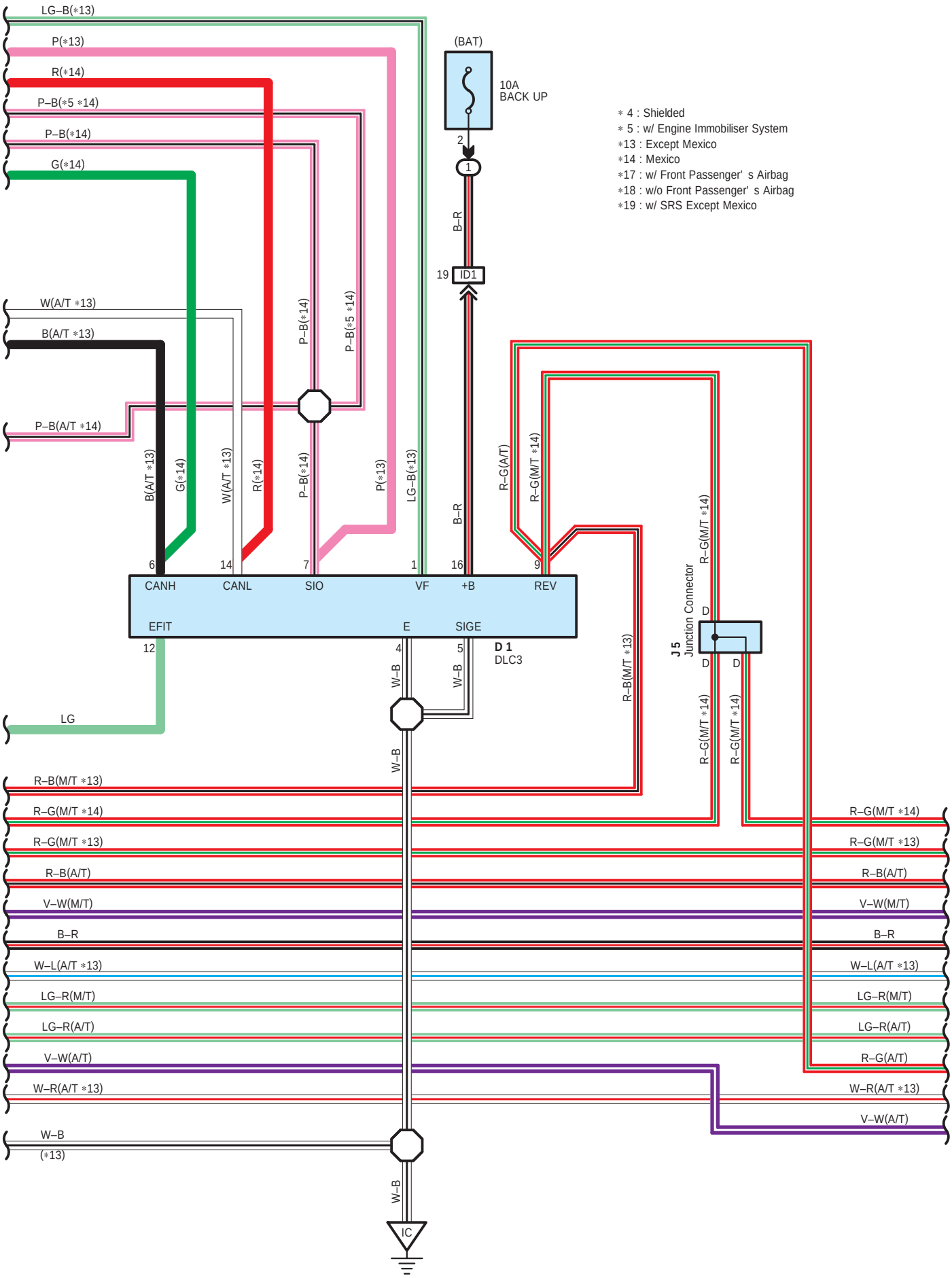
LG–B(∗13)
P(∗13)
R(∗14)
P–B(∗5 ∗14)
P–B(∗14)
G(∗14)
W(A/T ∗13)
B(A/T ∗13)
P–B(A/T ∗14)
(BAT)
10A
BACK UP
2
1
B–R
19
ID1
∗ 4 : Shielded
∗ 5 : w/ Engine Immobiliser System
∗13 : Except Mexico
∗14 : Mexico
∗17 : w/ Front Passenger' s Airbag
∗18 : w/o Front Passenger' s Airbag
∗19 : w/ SRS Except Mexico
P–B(∗14)
P–B(∗5 ∗14)
B(A/T ∗13)
G(∗14)
W(A/T ∗13)
R(∗14)
P–B(∗14)
P(∗13)
LG–B(∗13)
B–R
R–G(A/T)
R–G(M/T ∗14)
R–G(M/T ∗14)
6
14
7
1
16
9
CANH
CANL
SIO
VF
+B
REV
EFIT
E
SIGE
12
4
5
D 1
DLC3
W–B
W–B
R–B(M/T ∗13)
J 5
Junction Connector
D
D
D
R–G(M/T ∗14)
R–G(M/T ∗14)
LG
W–B
R–B(M/T ∗13)
R–G(M/T ∗14)
R–G(M/T ∗13)
R–B(A/T)
V–W(M/T)
B–R
W–L(A/T ∗13)
LG–R(M/T)
LG–R(A/T)
V–W(A/T)
W–R(A/T ∗13)
W–B
(∗13)
R–G(M/T ∗14)
R–G(M/T ∗13)
R–B(A/T)
V–W(M/T)
B–R
W–L(A/T ∗13)
LG–R(M/T)
LG–R(A/T)
R–G(A/T)
W–R(A/T ∗13)
V–W(A/T)
W–B
IC

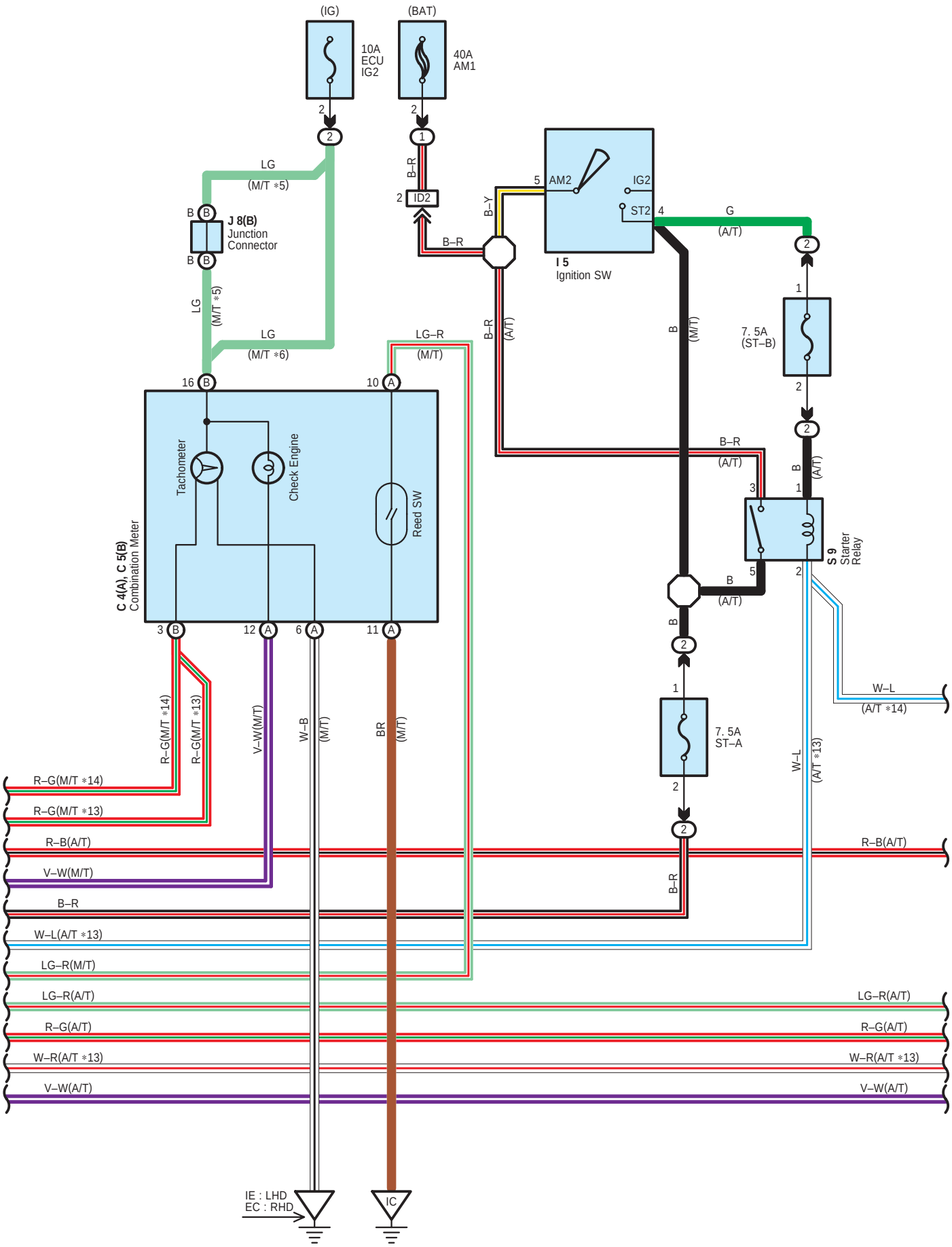
(IG)
(BAT)
10A
ECU
IG2
40A
AM1
LG
(M/T *5)
J 8(B)
Junction
Connector
LG
(M/T *5)
LG
(M/T *6)
B–R
ID2
B–Y
B–R
AM2
IG2
ST2
I 5
Ignition SW
G
(A/T)
B–R
(A/T)
B
(M/T)
7. 5A
(ST–B)
LG–R
(M/T)
B–R
(A/T)
B
(A/T)
S 9
Starter
Relay
B
(A/T)
B
7. 5A
ST–A
W–L
(A/T *14)
W–L
(A/T *13)
C 4(A), C 5(B)
Combination Meter
Tachometer
Check Engine
Reed SW
R–G(M/T *14)
R–G(M/T *13)
V–W(M/T)
W–B
(M/T)
BR
(M/T)
R–G(M/T *14)
R–G(M/T *13)
R–B(A/T)
V–W(M/T)
B–R
W–L(A/T *13)
LG–R(M/T)
LG–R(A/T)
R–G(A/T)
W–R(A/T *13)
V–W(A/T)
R–B(A/T)
LG–R(A/T)
R–G(A/T)
W–R(A/T *13)
V–W(A/T)
IE : LHD
EC : RHD
IC

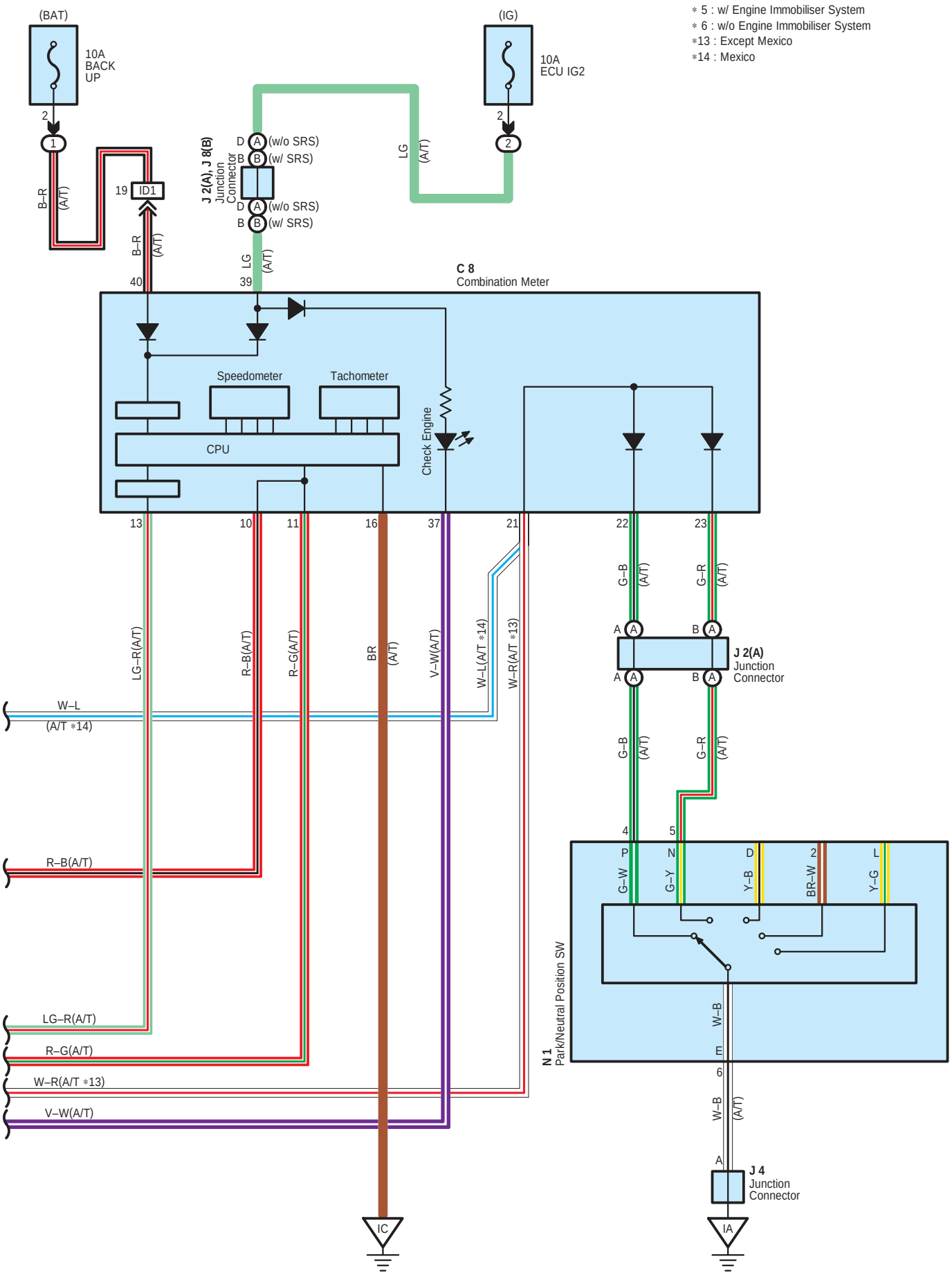
∗ 5 : w/ Engine Immobiliser System
∗ 6 : w/o Engine Immobiliser System
∗13 : Except Mexico
∗14 : Mexico
(BAT)
10A
BACK
UP
(IG)
10A
ECU IG2
J 2(A), J 8(B)
Junction
Connector
(w/o SRS)
(w/ SRS)
ID1
C 8
Combination Meter
Speedometer
Tachometer
CPU
Check Engine
J 2(A)
Junction
Connector
N 1
Park/Neutral Position SW
J 4
Junction
Connector
IC
IA
W–L
(A/T ∗14)
R–B(A/T)
LG–R(A/T)
R–G(A/T)
W–R(A/T ∗13)
V–W(A/T)

System Outline

∗ EFI system
The EFI system monitors the engine condition through the signals, which are input from each sensor to engine ECU. The best fuel injection volume is decided based on this data and the program memorized by the engine ECU, and the control signal is output to TERMINALS #10, #20, #30 and #40 of the engine ECU to operate the injector (Inject the fuel). The EFI system produces control of fuel injection operation by the engine ECU in response to the driving conditions.

∗ ESA system
The ESA system monitors the engine condition through the signals, which are input to the engine ECU from each sensor. The best ignition timing is decided according to this data and the memorized data in the engine ECU, and the control signal is output to TERMINALS IG1, IG2, IG3 and IG4. This signal controls the igniter to provide the best ignition timing for the driving conditions.

∗ Heated oxygen sensor heater control system
The heated oxygen sensor heater control system turns the heater on when the intake air volume is low (Temp. of exhaust emissions is low), and warms up the heated oxygen sensor to improve detection performance of the sensor.
The engine ECU evaluates the signals from each sensor, current is output to TERMINALS HT1B and HT2B, controlling the heater.

∗ VVT control
VVT control the intake valve timing in accordance with the engine conditions.

1. Diagnosis System

With the diagnosis system, when there is a malfunction in the engine ECU signal system, the malfunctioning system is recorded in the memory. The malfunctioning system can be found by reading the code displayed by the check engine warning lamp.

2. Fail–Safe System

When a malfunction has occurred in any system, if there is a possibility of engine trouble being caused by continued control based on the signals from that system, the fail–safe system either controls the system by using data (Standard values) recorded in the engine ECU memory or else stops the engine.

○ **: Parts Location**

Code		See Page	Code		See Page	Code		See Page
A3	A	24 (*1)	C7		34 (*4)	F9		26 (*2)
		26 (*2)	C8		28 (LHD)			32 (*3)
		32 (*3)			38 (*6)			34 (*4)
		34 (*4)	D1		28 (LHD)	F10		24 (*1)
A10	A	28 (LHD)			36 (*5)			26 (*2)
		36 (*5)			38 (*6)			32 (*3)
	B	28 (LHD)	E8	A	28 (LHD)			34 (*4)
C1		24 (*1)			36 (*5)	F11		24 (*1)
		26 (*2)			38 (*6)			26 (*2)
		32 (*3)	E9	B	28 (LHD)			32 (*3)
		34 (*4)			36 (*5)			34 (*4)
C2		24 (*1)			38 (*6)	F15	A	30 (LHD)
		26 (*2)	E10	C	28 (LHD)			40 (RHD)
		32 (*3)			36 (*5)	F18	B	30 (LHD)
		34 (*4)			38 (*6)			40 (RHD)
C4	A	28 (LHD)	E12	D	28 (LHD)	H8	A	28 (LHD)
		36 (*5)	E13	E	28 (LHD)		B	36 (*5)
		38 (*6)	E14	G	28 (LHD)			38 (*6)
C5	B	28 (LHD)	E15	F	28 (LHD)	H11		24 (*1)
		36 (*5)	F8		24 (*1)			26 (*2)
		38 (*6)			26 (*2)			32 (*3)
C7		24 (*1)			32 (*3)			34 (*4)
		26 (*2)			34 (*4)	H12		24 (*1)
		32 (*3)	F9		24 (*1)			

* 1 : LHD 3SZ–VE * 2 : LHD K3–VE * 3 : RHD 3SZ–VE * 4 : RHD K3–VE * 5 : RHD w/ Heater * 6 : RHD w/o Heater

: Parts Location

Code	See Page	Code	See Page	Code	See Page
I1	25 (*1)	J1	39 (*6)	R14	39 (*6)
	27 (*2)	J2 A	29 (LHD)	S3	29 (LHD)
	33 (*3)		39 (*6)		37 (*5)
	35 (*4)	J3	29 (LHD)		39 (*6)
I2	25 (*1)		39 (*6)	S4	25 (*1)
	27 (*2)	J4	29 (LHD)		33 (*3)
	33 (*3)		39 (*6)		35 (*4)
	35 (*4)	J5	29 (LHD)	S9	29 (LHD)
I3	25 (*1)	J6	29 (LHD)		39 (*6)
	27 (*2)		37 (*5)	T1	25 (*1)
	33 (*3)		39 (*6)		27 (*2)
	35 (*4)	J8 B	29 (LHD)		33 (*3)
I4	25 (*1)		37 (*5)		35 (*4)
	27 (*2)	K1	25 (*1)	T9 B	29 (LHD)
	33 (*3)		27 (*2)		39 (*6)
	35 (*4)		33 (*3)	T14	29 (LHD)
I5	29 (LHD)		35 (*4)		37 (*5)
	37 (*5)	N1	29 (LHD)	V1	25 (*1)
	39 (*6)		39 (*6)		27 (*2)
I6	25 (*1)	P1	25 (*1)		33 (*3)
	27 (*2)		27 (*2)		35 (*4)
	33 (*3)		33 (*3)	V3	25 (*1)
	35 (*4)		35 (*4)		27 (*2)
I7	25 (*1)	R5 A	29 (LHD)		33 (*3)
	27 (*2)		37 (*5)		35 (*4)
	33 (*3)		39 (*6)	W1	25 (*1)
	35 (*4)	B	29 (LHD)		27 (*2)
J1	29 (LHD)	R14	29 (LHD)		33 (*3)
	37 (*5)		37 (*5)		35 (*4)

: Relay Blocks

Code	See Page	Relay Blocks (Relay Block Location)
1	22	Engine Room R/B (Engine Compartment Right)
2	23 (LHD)	Fuse Block (Left Kick Panel)
	23 (RHD)	Fuse Block (Right Kick Panel)

* 1 : LHD 3SZ–VE * 2 : LHD K3–VE * 3 : RHD 3SZ–VE * 4 : RHD K3–VE * 5 : RHD w/ Heater * 6 : RHD w/o Heater

: Connector Joining Wire Harness and Wire Harness

Code	See Page	Joining Wire Harness and Wire Harness (Connector Location)
IA1	44 (LHD)	Engine Wire and Instrument Panel Wire (Right Kick Panel)
	48 (*5)	Engine Wire and Instrument Panel Wire (Left Kick Panel)
	49 (*6)	
ID1	44 (LHD)	Engine Room Main Wire and Instrument Panel Wire (Right Kick Panel)
	48 (*5)	Engine Room Main Wire and Instrument Panel Wire (Cowl Side Panel RH)
	49 (*6)	
ID2	44 (LHD)	Engine Room Main Wire and Instrument Panel Wire (Right Kick Panel)
	48 (*5)	Engine Room Main Wire and Instrument Panel Wire (Cowl Side Panel RH)
	49 (*6)	
IF1	44 (LHD)	Instrument Panel Wire and Floor Wire (Left Kick Panel)
	48 (*5)	Instrument Panel Wire and Floor Wire (Right Kick Panel)
	49 (*6)	
IH1	44 (LHD)	Instrument Panel Wire and Instrument Panel Wire (Instrument Panel RH)
	48 (*5)	Instrument Panel Wire and Instrument Panel Wire (Instrument Panel LH)
BC1	45 (LHD)	Fuel Pump Wire and Floor Wire (Near the Fuel Tank)
	50 (RHD)	

: Ground Points

Code	See Page	Ground Points Location
EB	42 (*1)	Rear Side of Engine Block
	43 (*2)	
	46 (*3)	
	47 (*4)	
EC	46 (*3)	Left Fender Apron
	47 (*4)	
IA	44 (LHD)	Right Kick Panel
	49 (*6)	Left Kick Panel
IC	44 (LHD)	Cowl Side Panel LH
	48 (*5)	Right Kick Panel
	49 (*6)	
IE	44 (LHD)	Cowl Side Panel LH
BA	45 (LHD)	Rear Quarter Panel RH
	50 (RHD)	

* 1 : LHD 3SZ–VE * 2 : LHD K3–VE * 3 : RHD 3SZ–VE * 4 : RHD K3–VE * 5 : RHD w/ Heater * 6 : RHD w/o Heater